

DARKO

Item code	85.DOW.20P3.01.AHFE
Product type	Outdoor
Category	Surface Downlights
Family	DARKO
Subfamily	DARKO
Pictograms	CRI 90 · CE · IP 65 · DALI

Dimensions	
Product dimensions (mm)	φ160*H275mm

Scheme

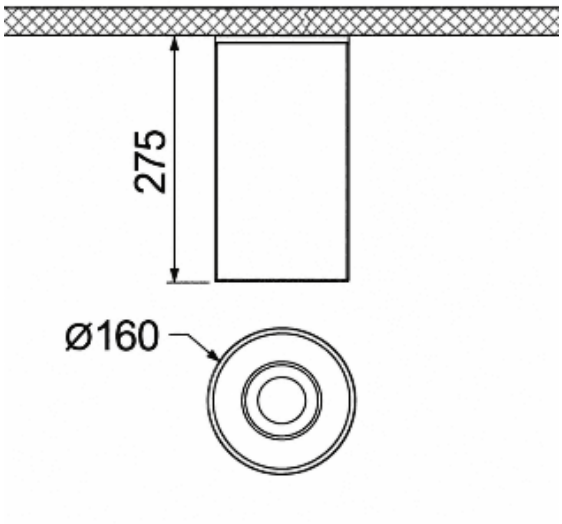

Product	
Real power (W)	20
Real luminous flux (Lm)	2100
Luminous efficiency (Lm/W)	105
Beam angle (º)	Wall washer 60 x 40
Life time (h)	50000h L80 B10
IP	65
Driver	Included – Integrated
Control gear	DALI 2
Colour temperature (K)	3000K
Colour consistency (SDCM)	SDCM2
CRI	90